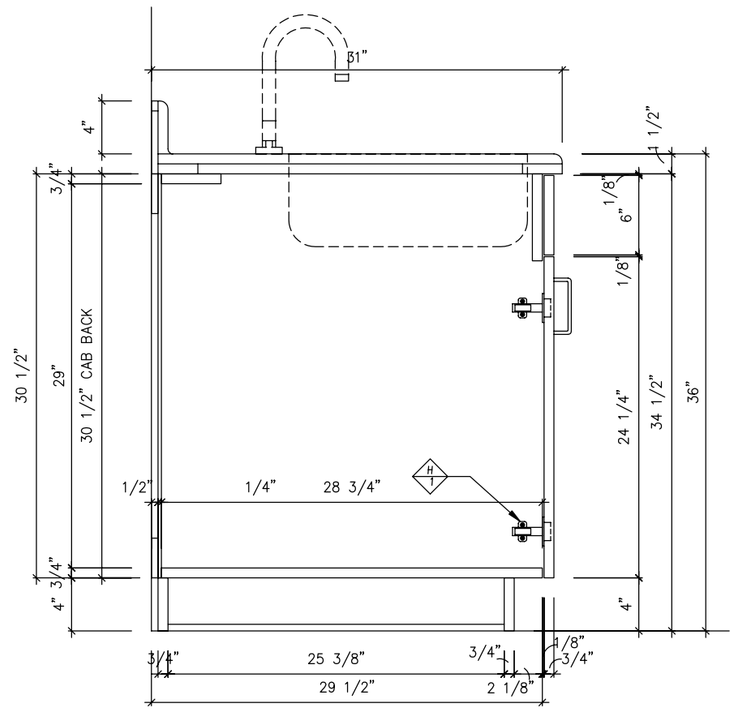

DETAIL 2
SCALE : 1 1/2"=1'-0"

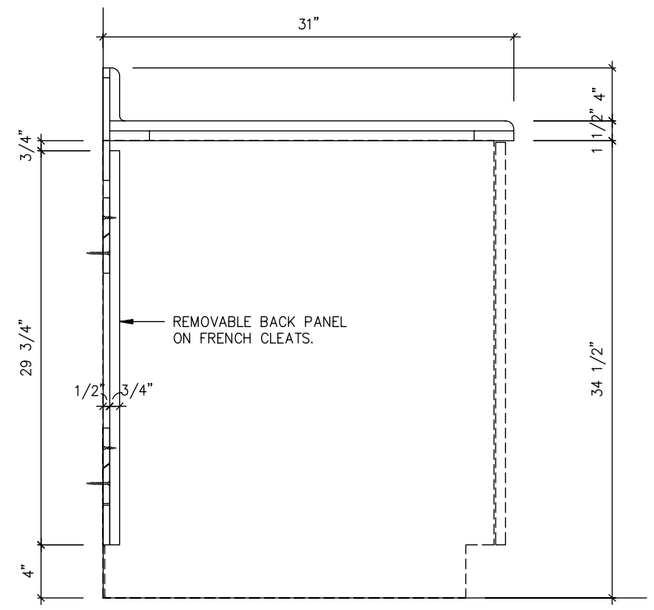

DETAIL 3
SCALE : 1 1/2"=1'-0"

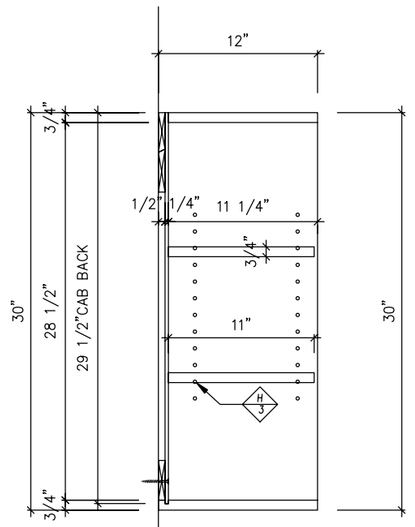

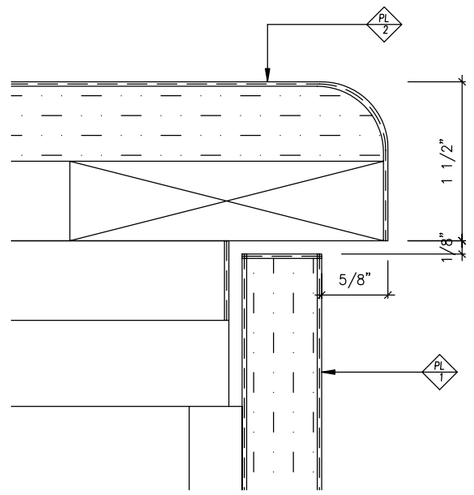

F.S. DETAIL 6

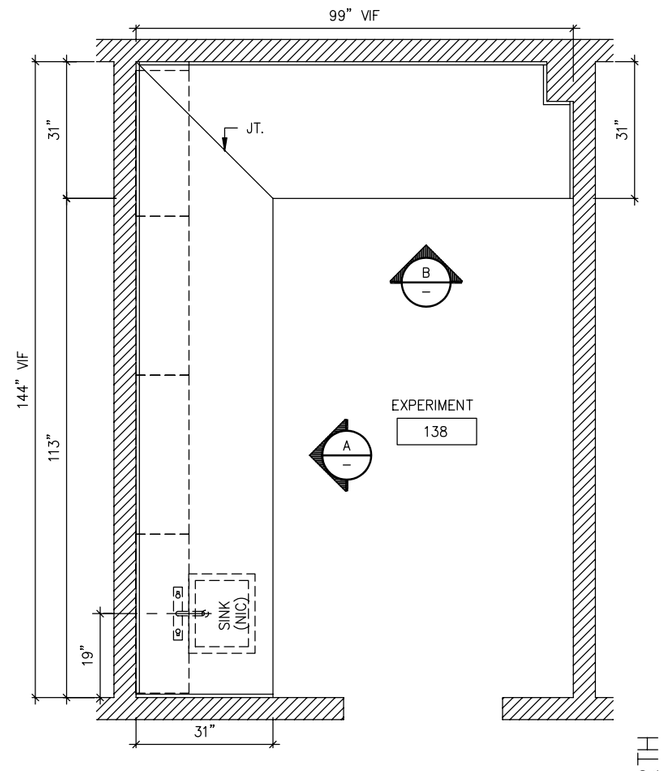

PLAN VIEW 1
SCALE : 1/2"=1'-0"

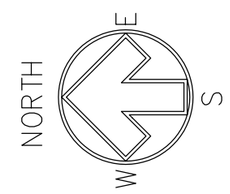

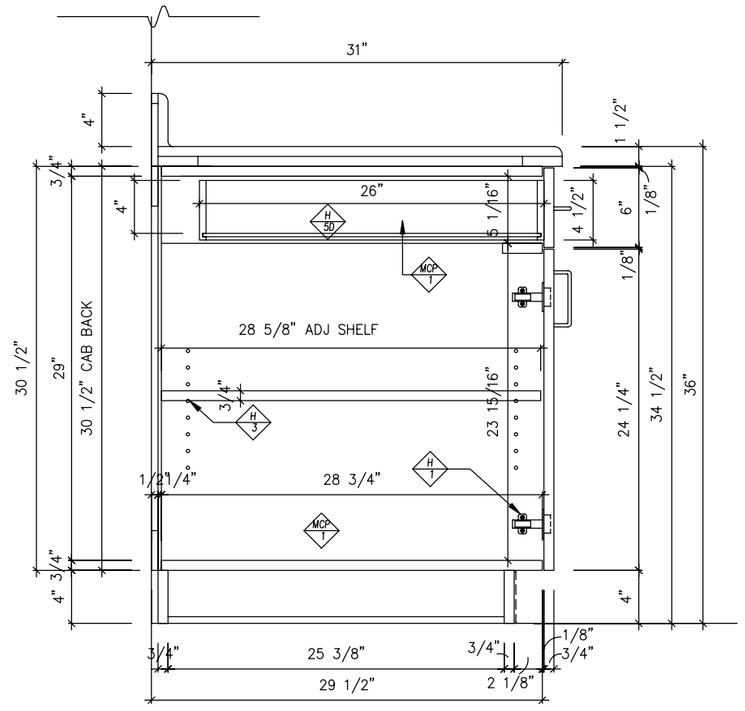

DETAIL 4
SCALE : 1 1/2"=1'-0"

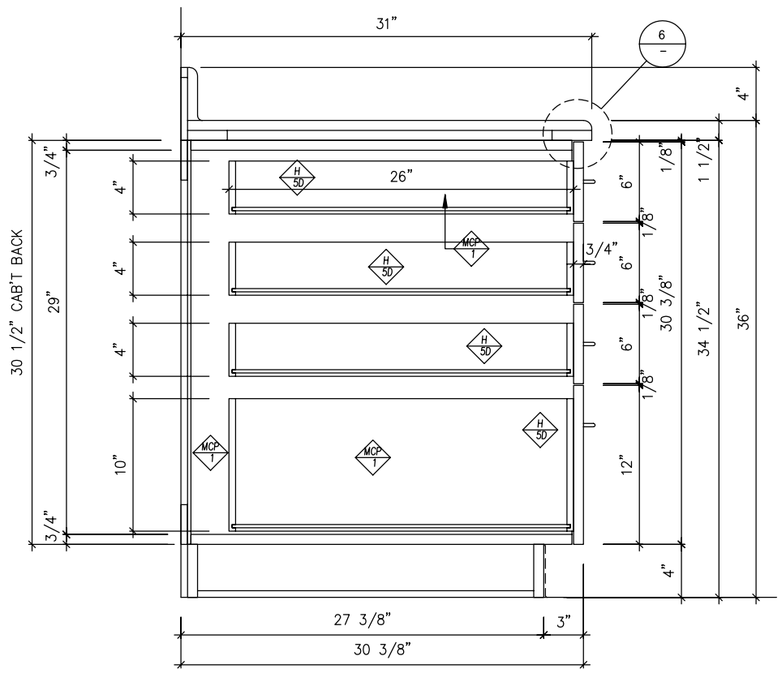

DETAIL 5
SCALE : 1 1/2"=1'-0"

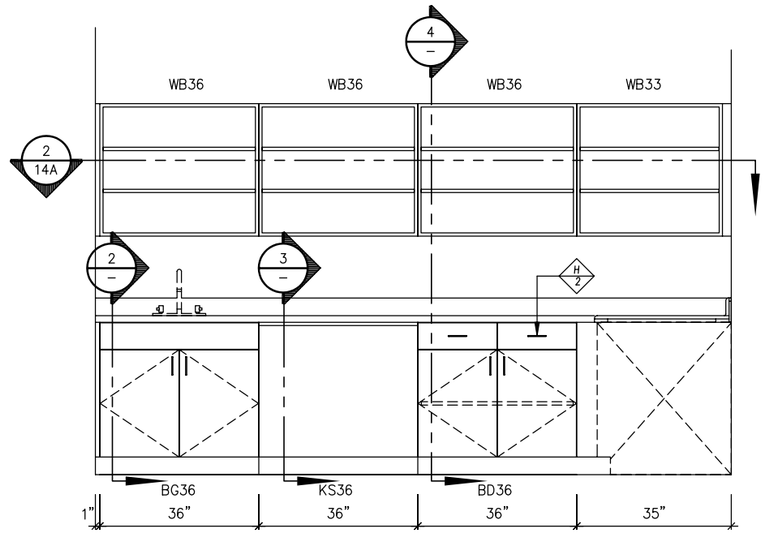

ELEVATION A
SCALE : 1/2"=1'-0"

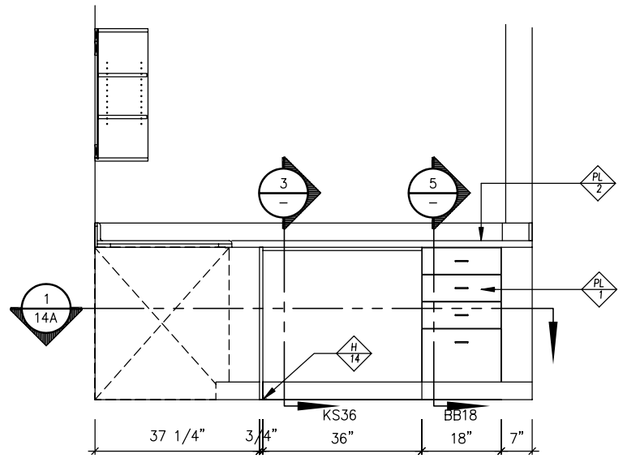

ELEVATION B
SCALE : 1/2"=1'-0"

CAD SHOP DRAWINGS

CAD SHOP DRAWINGS
Anaheim, California 92804

ARCHITECTURAL WOODWORK INSTITUTE

RELEASED STAMP

REVISIONS :

GRADE : CUSTOM	*DATE SUBMITTED :* 7/9/04
RELEASED BY : .	*FILE :*
JOB NUMBER :	*DRAWING DATE :* 7/9/04
DRAWN BY : ASK	*APPROVED BY :* CAP

P.J.COSMETICS
ANYWHERE,U.S.A
P-LAM_CABINETRY
ROOM:107

SHEET NUMBER