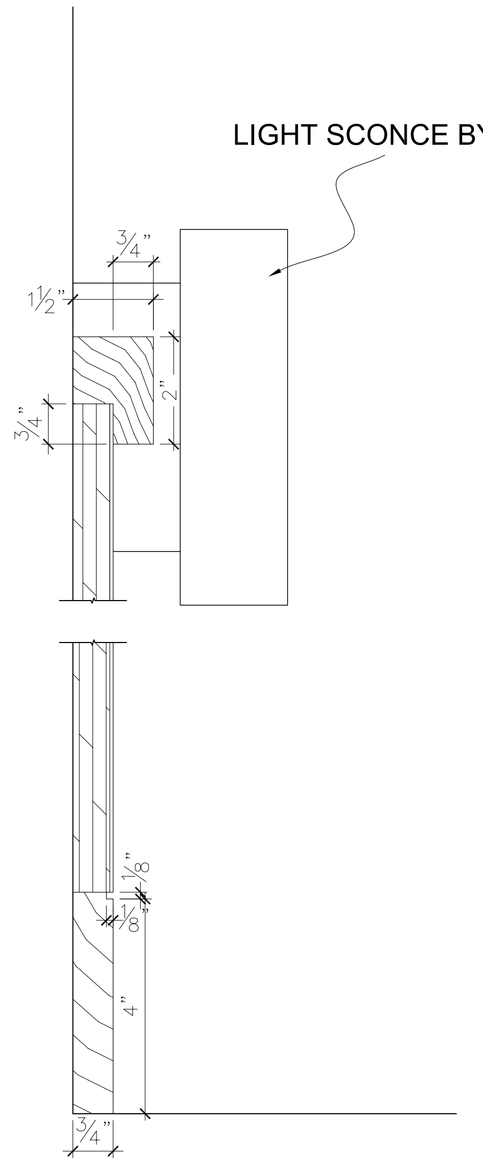

DETAIL B
SCALE : 6" = 1'-0"

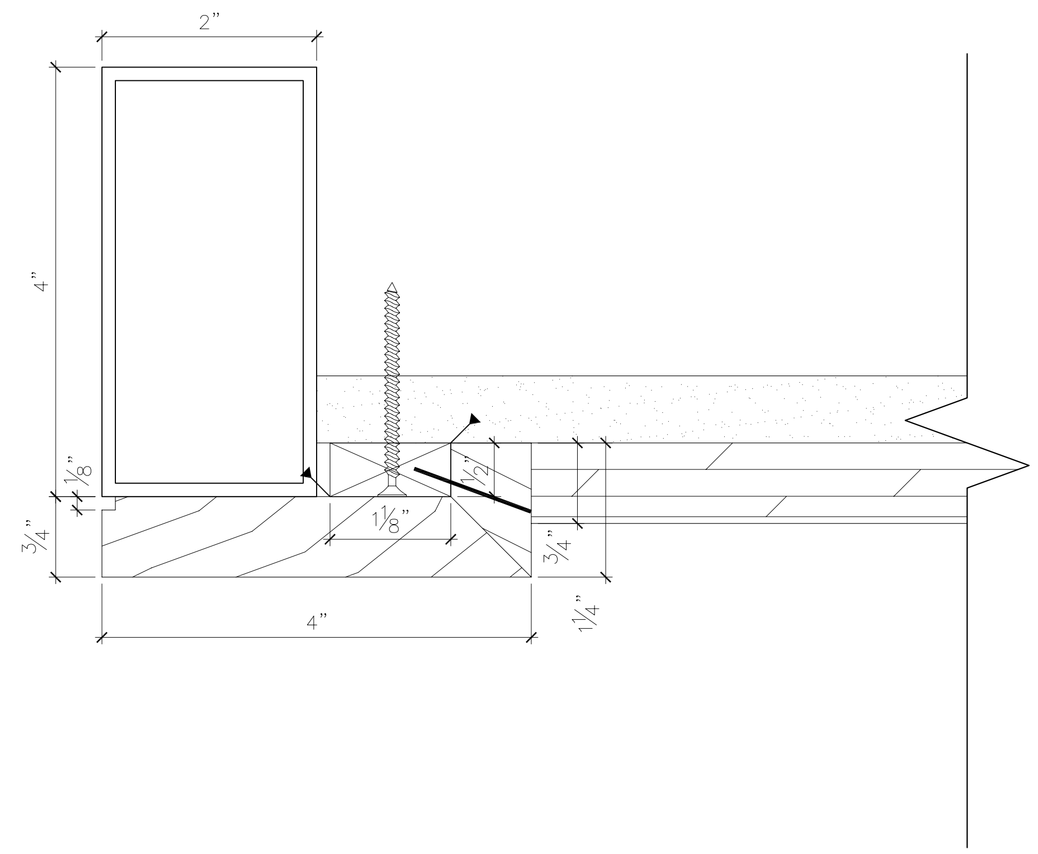

DETAIL A
SCALE : F.S.

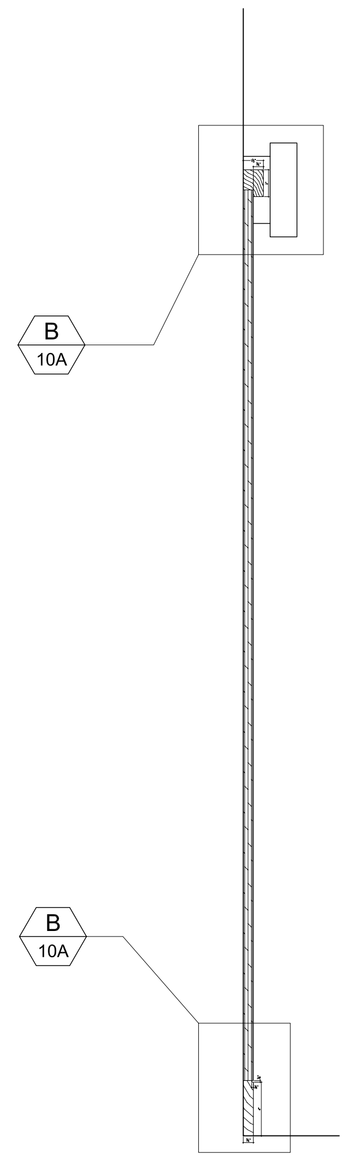

CROSS SECTION 2
SCALE : 1-1/2"=1'-0"

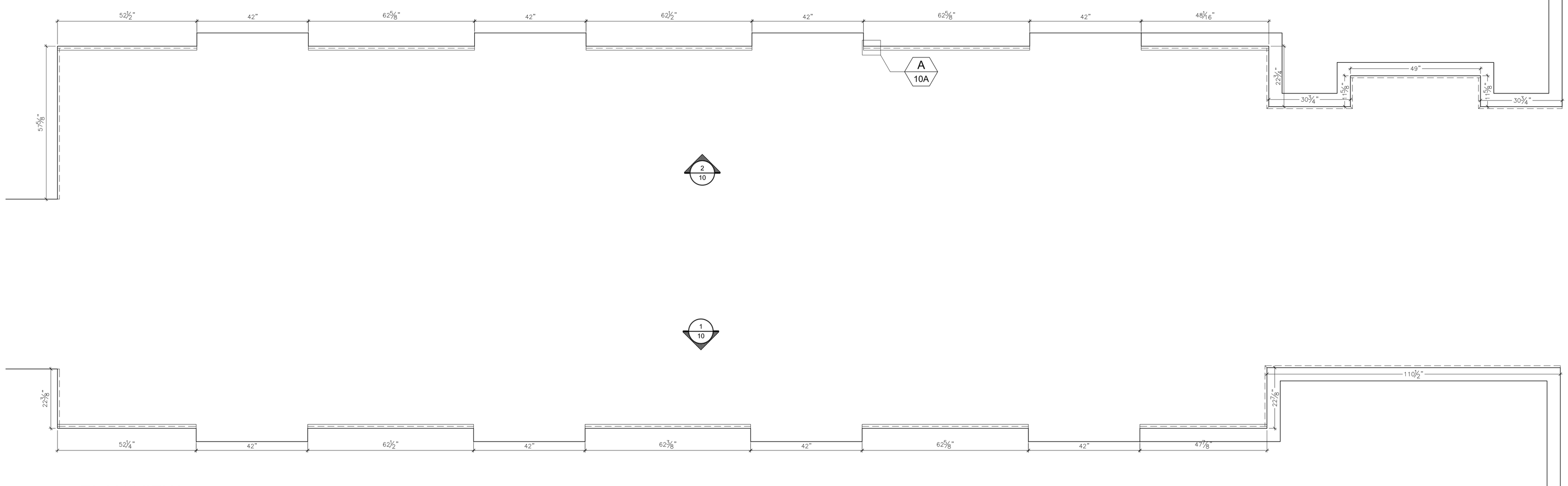

PLAN VIEW 1
SCALE : 5/8"=1'-0"

CAD SHOP DRAWINGS
Anaheim, California 92804

RELEASED STAMP

REVISIONS :

GRADE : CUSTOM
DATE SUBMITTED :
RELEASED BY :
PROJ. ENGINEER : MP

JOB NUMBER :
DRAWING DATE : 9/9/04
DRAWN BY : MT
PROJ. MANAGER : CAP

OLIVER_WRIGHT.LAW.OFFICE
ANYWHERE,U.S.A
ELEVATOR-LOBBY